BTS Alloy Grade ‘S/6’ Bow Lifting Shackles

BTS Alloy Grade ‘S/6’ c/w Orange Pin

Bow Lifting Shackles to AS2741 - 2002 and EN13892 - 2003

BEAVER TECHNOLOGY SERVICES PTY LIMITED

Alloy Grade 'S/6' Bow Lifting Shackles to AS2741-2002 and EN13889-2003

BTS Alloy Grade 'S' Shackles with Orange Pin have been developed in accordance with Australian Standard AS2741-2002 and European Standard EN13889-2003

All **BTS** Grade 'S' **Orange Pin** Shackles are easily identified and traceable in accordance with our Quality Assurance system. The following identification marks are forged on the shackle.

1. Individually stamped with the working load limit in tonnes (i.e. W.L.L. 1T).
2. The grade appears on the top of the shackle. The letter 'S' indicating that it is an Alloy Grade 'S' lifting shackle. The number 6 indicates that the shackle is compliant with European requirements.
3. An alpha-numeric number - prefixed with "BM number" can be traced back to the test certificate.
4. The month and year of manufacture adds further traceability of the materials used and to the relevant test certificates for sizes 6mm to 57mm.
5. When requested, and at no extra charge, **BTS** Alloy Grade 'S' **Orange Pin** Shackles come with **BTS's** standard Test Certificate. Alternatively a **BTS** NATA Test Certificate can be supplied at an extra cost.
6. **BTS** Alloy Grade 'S' **Orange Pin** Shackle bodies are two thirds punched and the remaining third machined,this means consistent dimensions and that the shackle pin always fits correctly.
7. **BTS** Alloy Grade 'S' **Orange Pin** Shackles come in Screw Pin Bows & Safety Pin Bows.

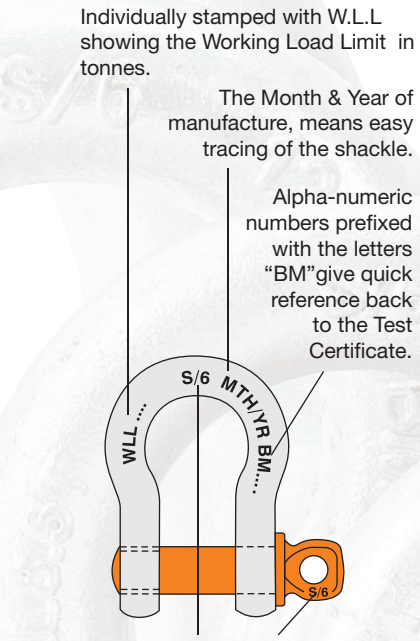

NATA
WORLD RECOGNISED ACCREDITATION
No. 18940

bsi. ISO 9001 Quality Management

BTS always offers the latest technology in shackles such as Grade 'S'.

BTS consistently carries out research and development in Australia and overseas to establish quality products, which **BTS** are proud to be associated with and to promote. When the **BTS** name is associated with a product, you can be sure that all relevant Australian Standards are always maintained in strict accordance with our ISO9001 Quality System.

As a further assurance of quality control, **BTS** carries out its own in-house independent random proof and break testing. This is an added safety precaution to maintain the reliability of the products **BTS** sells and is in addition to any manufacturer's test certificate supplied with lifting products.

The basics of lifting are as easy as 1-2-3

At a glance, a safety lifting product such as the **BTS** Alloy Grade 'S' **Orange pin** Shackle can be easily identified and safely used by following these steps.

1. First, identify the easy to read MARKINGS which indicate the test number - correlated with the month and year of manufacture.
2. Second, identify the LETTER that indicates the grade of the shackle. For example: **BTS** Grade 'S'.
3. Third, identify the NUMERICAL CAPACITY of the Working Load Limit that the shackle can be safely used to, expressed in tonnes.

BTS Alloy Grade 'S' Bow Screw Collar Pin and Safety Pin Shackles to AS2741-2002 with Orange Pin and EN13889-2003

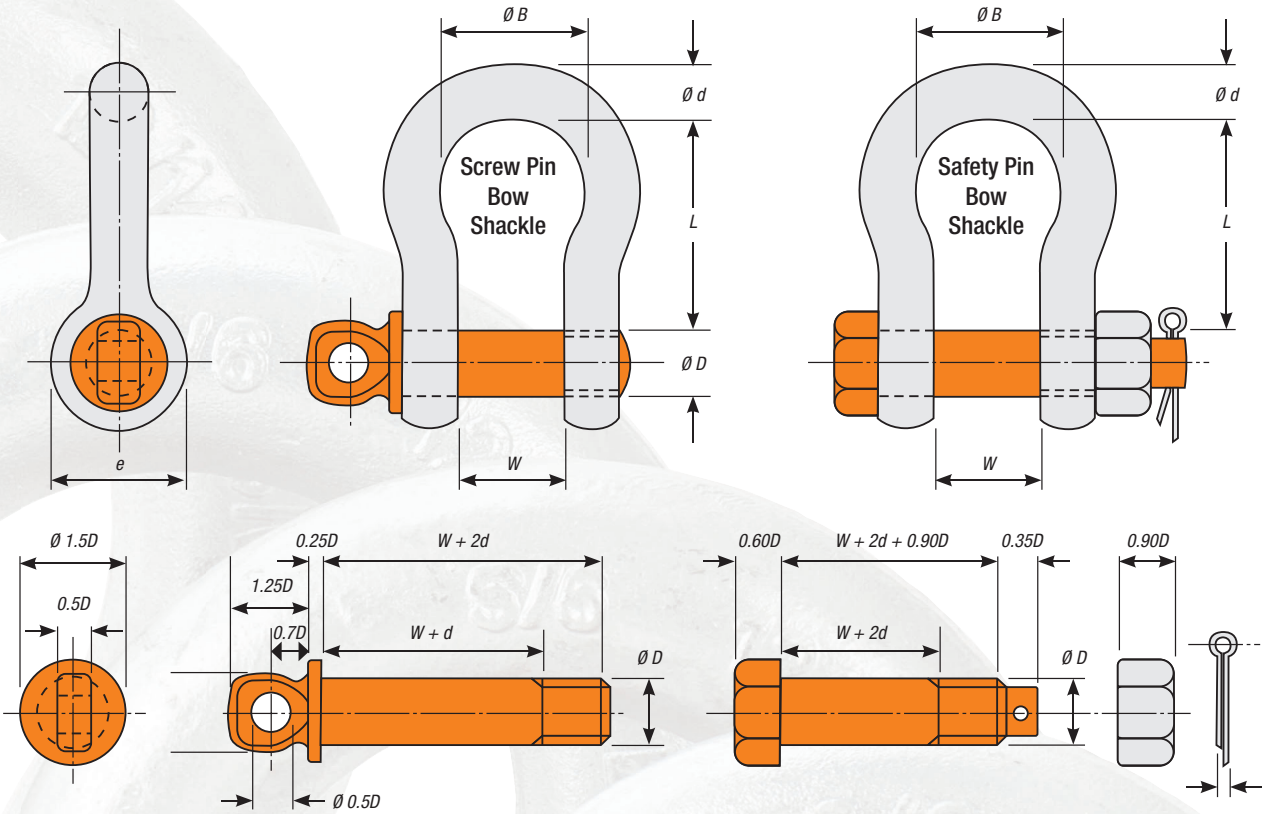

Screw Pin Bow Shackle	Nominal Size	Dia. Body	Dia. Pin	Inside Width	Inside Width of Bow	Inside Lenght	Dia. Boss	Working Load Limit	Safety Pin Bow Shackle
BTS Code	Dia. mm	d mm	D mm	W mm	B mm	L mm	e mm	W.L.L. Tonnes	BTS Code
BT242306	6	6	8	12	20	29	17	0.50	N/A
BT242308	8	8	10	13	21	31	21	0.75	N/A
BT242310	10	10	11	17	26	37	25	1.0	N/A
BT242311	11	11	13	18	29	43	27	1.5	N/A
BT242313	13	13	16	21	33	48	33	2.0	BT244313
BT242316	16	16	19	27	43	61	40	3.2	BT244316
BT242319	19	19	22	32	51	72	48	4.7	BT244319
BT242322	22	22	25	37	58	84	54	6.5	BT244322
BT242325	25	25	29	43	68	95	60	8.5	BT244325
BT242329	29	29	32	46	74	108	67	9.5	BT244329
BT242332	32	32	35	52	83	119	76	12	BT244332
BT242335	35	35	38	57	92	133	84	13.5	BT244335
BT242338	38	38	41	60	98	146	92	17	BT244338
BT242344	44	44	51	73	127	178	110	25	BT244344
BT242351	51	51	57	83	146	197	127	35	BT244351
BT242357	57	57	63	95	160	222	143	42.5	BT244357
BT242363	63	63	70	105	184	267	152	55	BT244363

NATA World Recognised Accredited TESTING FACILITY

Beaver Technology Services (BTS) commitment to supply quality products and service means that we are able to supply a wide variety of services in our **NATA** accredited laboratory. This commitment starts with our **AS/NZS ISO9001-2000** Quality Assurance right through to our highly trained and competent staff (many of our staff have been factory trained on a number of Materials Handling and Height Safety products).

Our **NATA** scope includes Australian, European and Military Standards. Our experienced staff have been providing technical assistance to the Construction, Mining, Maritime, Military, Engineering and Materials Handling sectors for many years. All of our testing work is carried out in accordance with the relevant standard.

All of our testing equipment is routinely calibrated as per Australian Standards (copies of calibration certificates are available on request) also all of our test beds produce computerised test certificates with graphical results showing force over time.

BTS has also developed a number of specialised testing and inspection regimes in conjunction with a number of customers to meet their specified needs, outside of the usual scope of products. **BTS** also ensures that dedicated equipment is tested in conjunction with the manufacturer's requirements and site specific needs.

Our NATA laboratory is located at our Girraween Head Office where we can offer the following services:

- Horizontal tensile testing to 270 metric tonne
- Compression testing to 100 metric tonne
- Vertical test machines in 30 & 100 metric tonne
- Portable load cells from 5 to 25 metric tonnes
- Chain block, lever block and hoist testing
- Magnetic crack testing (MCC)
- Product recertification
- Height safety dynamic and static testing to AS/NZS and EN standards
- Drop testing on height safety anchor points on our custom designed testing tower and also on our mobile drop test trailer (to AS/NZS5532-2013)
- Hardness testing (HRC, BHN & HV)
- Charpy impact testing

We also offer:

- On-site testing and inspections
- Hydraulic testing of Height Safety Anchor Points
- Testing officers / Riggers for your on-site emergencies
- Fast turn around with competitive rates
- Rigging services
- Setting up and maintenance of Testing and Equipment registers
- Re-certifying of products and issuing of Test Certificates

DISTRIBUTED BY:

BEAVER TECHNOLOGY SERVICES PTY LIMITED
www.btstech.com.au

⚠ CAUTION

Inspect shackle markings and body for damage before each use.
Refer to load chart for guidance.

NATA WORLD RECOGNISED ACCREDITATION No. 18940

ISO 9001 Quality Management

Specifications and dimensions subject to change without notice.

© Copyright Beaver Technology Services Pty Limited 01/2019 BØC - TB - 04 - S/6 4 pages Rev-1